ES30TI Series Positioning System

ESPRIT® SYSTEM WITH THERMAL IMAGING OPTICS

Product Features

- Receiver, Pan/Tilt, and Enclosure with an Integrated Thermal Imaging Camera
- Sensitivity Below 40 mK at F1.0
- Long Wave, Uncooled, Vanadium Oxide Microbolometer
- 320 x 240 Resolution—38 µm Pixel Size
- User Definable/Programmable Camera Settings
- On-Screen Compass, Tilt, and Zoom Display
- 2X Digital Zoom
- Integral Multi-Protocol Receiver/Driver
- Variable Speed Pan: 0.1° to 100°/Second with Proportional Pan
- 360° Continuous Pan Rotation
- Zone Blanking—Allows up to Eight Zones (Programmable in Size) to Be Set to Output Blank Video
- Operational in 90 mph Wind Conditions; Can Withstand Wind Velocity up to 130 mph
- Pan Preset Speed of 100° Per Second in 50 mph Winds and 50° Per Second in 90 mph Winds
- Tilt Range of +33° to -83° from Horizontal
- Preset Positioning, Patterns, Multiple Scan Modes
- Designed for Minimal Maintenance, No Gears to Adjust

ES30TI ESPRIT THERMAL IMAGING SYSTEM (SHOWN WITH PEDESTAL MOUNT)

The **ES30TI Series** combines the power of an advanced thermal imaging device with the precision of an Esprit pan/tilt to create a completely integrated, single addressable thermal imaging positioning system. At the core of the **ES30TI** is an uncooled, vanadium oxide microbolometer, long wave infrared (LWIR) camera. It delivers 320 x 240 thermal video with a pixel size of 38 µm and supports 2X digital zoom.

The **ES30TI** Series provides outstanding sensitivity below 40 mK. It is capable of multiple display formats, including white hot, black hot, and color signatures. The **ES30TI** is available with three different lens configurations—14.25 mm, 35 mm, and 50 mm focal lengths—for effective deployment in a wide range of applications.

A powder-coated, aluminum construction makes the **ES30TI Series** ideal for either indoor or outdoor applications. The system has an absolute operating temperature range of -50° to 140°F (-45° to 60°C). Within two hours after power-up, the entire unit can de-ice and be operational from a temperature of -13°F (-25°C).

A built-in heater, window defroster/defogger, sun shroud, and insulation blanket are standard features on the **ES30TI Series**. All units also include an open collector auxiliary output that functions for two seconds before deactivating.

The **ES30TI Series** variable pan and tilt speeds range from 0.1 to 40 degrees per second in manual pan mode and 0.1 to 20 degrees per second in manual tilt. Pan preset and turbo speeds are 100 degrees per second in wind speeds of 50 mph and 50 degrees per second in the 90-mph wind-speed profile. Tilt preset speed is 30 degrees per second. The **ES30TI** is capable of 360 degrees of continuous pan rotation. The tilt range allows for horizontal viewing of +33 to -83 degrees. There are 64 programmable preset positions with a preset accuracy of one-quarter degree.

ES30TI Series systems are available with an input voltage of 24 VAC or with a selectable power source of 120/230 VAC. The **ES30TI** also has a power-up recovery mode that lets users specify the operation to perform whenever the power is cycled.

TECHNICAL SPECIFICATIONS

PRODUCT FEATURES

- Deterrent Surveillance
- Integral Multi-Protocol (Coaxitron®, RS-422 Pelco D and P) Receiver/Driver
- Digital Position and Feedback Using Pelco D Protocol
- Integral Infrared (IR) Camera Enclosure
- Variable Speed 0.1-100°/Second
- 360° Continuous Pan Rotation
- +33° to -83° Tilt Range
- Operational in 90 mph Winds, Can Withstand Wind Velocity Up to 130 mph
- Pan Preset Speed of 100° Per Second in 50 mph Winds and 50° Per Second in 90 mph Winds
- Meets NEMA Type 4X and IP66 Standards—Pan/Tilt and Enclosure
- Variable Scan Speeds (0.1-40°/Second)
- Translator Boards for Selected Competitive Protocols
- Easy to Install – Quick and Simple Electrical Connections
- 24 VAC or 120/230 VAC Selectable
- Designed for Minimal Maintenance, No Gears to Adjust
- Full Continuous-Duty Warranty

SOFTWARE/HARDWARE

- 64 Progammable Presets with Labels
- Auto, Frame, and Random Scan
- Programmable Power Up Mode
- Programmable Park
- Programmable Manual Limit Stops (Pan)
- Programmable Scan Limit Stops (Pan)
- Patterns
- Proportional Pan/Tilt
- Eight Zones (Programmable in Size) Can Be Labeled with up to 20 Characters Each
- Up to Eight Zones (Programmable in Size) Can Be Set to Output Blank Video
- 10-Inch Integrated Enclosure with Pre-Assembled, Thermal Camera
- Sun Shroud, Heater/Window Defroster, and Insulation All Standard
- One Auxiliary Output

ALL CAMERAS

- Programmable Settings
- AC Line Lock
- NTSC/PAL

ELECTRICAL

Input Voltage	24, 120, or 230 VAC, 50/60 Hz; switch selectable for 120/230 VAC inputs
Input Voltage Range	±10%
Power Consumption	Maximum 70 VA per system
Heater and Defroster	Thermostatically controlled
Electrical Connections	Two power source connections made at mount location with wire splices and one ground wire splice; one BNC receptacle and four wire splices at mount location for RS-422 Pelco D and Pelco P protocols; two wire splices for open collector auxiliary output
Aux 2	Open collector output with 2-second activation; connected relay must require no more than 32 VDC and 40 mA to energize relay coil; wire length between Esprit and relay must be less than 100 feet (30 m)

Video Coaxial Cable Max. Wiring Distances

Cable Type*	Maximum Distance
RG59/U	750 feet (229 m)
RG6/U	1,000 feet (305 m)
RG11/U	1,500 feet (457 m)

*Minimum cable requirements: 75 ohms impedance; all-copper center conductor; all copper braided shield with 95% braid coverage

MECHANICAL

Pan Movement	360° continuous pan rotation
Vertical Tilt	Unobstructed +33° to -83°
Variable Pan/Tilt Speed	
Pan	0.1° to 40°/sec variable-speed operation, 100°/sec Turbo
Tilt	0.1° to 20°/sec variable-speed operation
Preset Speeds	
Pan	100°/sec
Tilt	30°/sec
Camera Mounting	Integrated camera sled assembly
Latches	One link-lock, No. 3 stainless-steel latch; can be secured with padlock (not supplied)

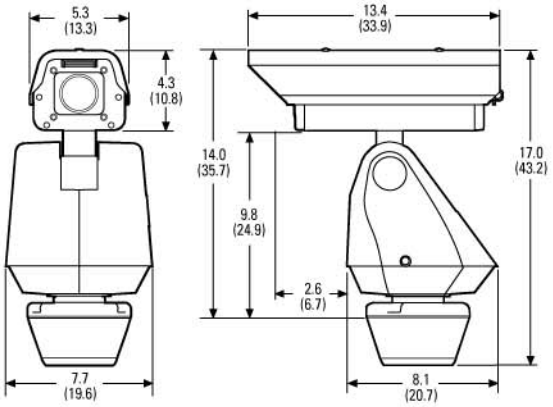

NOTE: VALUES IN PARENTHESES ARE CENTIMETERS; ALL OTHERS ARE INCHES.

TECHNICAL SPECIFICATIONS

THERMAL CAMERA/OPTICS

Detector	Uncooled Microbolometer, Vanadium Oxide (VOx)
Array Format	
Block 2	320x240, 160x120 "zoom" mode available
Block 1	320x120
Pixel Size	38 µm
Spectral Response	7.5 to 13.5 µm, Long Wave Infrared (LWIR)
Video Output	NTSC/PAL
Normalization Source	Internal shutter (offset only), 0.7 sec video freeze during shutter wink
Time to Image	Less than 2 seconds, no thermoelectric cooler (TEC)
Image Control	2X digital zoom
Serial Command	RS-232 compatible
Scene Temp Range	
(Lens Dependent)	To 150°C standard; optional auto-gain mode extends range to 560°C
Lens Options	14.25 mm, F1.3 lens 35 mm, F1.4 lens 50 mm, F2.0 lens

PIXELS ON TARGET (POT)

The following performance values are based on a man-sized target from a unit mounted at 25 ft (8 m) under normal atmospheric conditions:

Model	Lens	Horizontal Field of View	Identification (12 POT)	Detection (2 POT)
ES3014TI	14.25 mm	50°	305 ft (93 m)	807 ft (246 m)
ES3035TI	35 mm	20°	767 ft (234 m)	1,902 ft (580 m)
ES3050TI	50 mm	14°	1,115 ft (340 m)	2,736 ft (834 m)

GENERAL

Construction	Die-cast, extruded and sheet aluminum; stainless steel hardware	
Finish	Gray polyester powder coat	
Viewing Window	3 mm thick hard carbon coated Germanium	
Operating Temperature	-50° to 122°F (-45° to 50°C) for sustained system operation or 140°F (60°C) absolute maximum. Within two hours after power-up, the entire unit can de-ice and be operational from a temperature of -13°F (-25°C).	
Operating Environment	Will remain operational in 90 mph wind conditions; withstands 130 mph	
Weight	With Pedestal Adapter	With Wall Mount
Unit	20 lb (9.0 kg)	22 lb (9.9 kg)
Shipping	25 lb (11.3 kg)	28 lb (12.6 kg)
Effective Projected Area (EPA)	104 square inches (with pole adapter) 132 square inches (with wall mount)	

CERTIFICATIONS/RATINGS/PATENTS

- CE, Class B (all models)
- UL Listed (NTSC models)
- UL Listed to Canadian safety standards (NTSC models)
- FCC, Class B (NTSC models)
- Meets NEMA Type 4X and IP66 standards
- U.S. Patents 340,940 and 5,224,675

SYSTEM MODELS AND ACCESSORIES

MODELS

Lens	Format	Pedestal Mount*		Wall Mount**	
		24 VAC	120/230 VAC	24 VAC	120/230 VAC
14.25 mm	NTSC	ES3014TI-2N	ES3014TI-5N	ES3014TI-2W	ES3014TI-5W
	PAL	ES3014TI-2N-X	ES3014TI-5N-X	ES3014TI-2W-X	ES3014TI-5W-X
	PAL 9Hz	ES3014TI-2N-X1	ES3014TI-5N-X1	ES3014TI-2W-X1	ES3014TI-5W-X1
35 mm	NTSC	ES3035TI-2N	ES3035TI-5N	ES3035TI-2W	ES3035TI-5W
	PAL	ES3035TI-2N-X	ES3035TI-5N-X	ES3035TI-2W-X	ES3035TI-5W-X
	PAL 9Hz	ES3035TI-2N-X1	ES3035TI-5N-X1	ES3035TI-2W-X1	ES3035TI-5W-X1
50 mm	NTSC	ES3050TI-2N	ES3050TI-5N	ES3050TI-2W	ES3050TI-5W
	PAL	ES3050TI-2N-X	ES3050TI-5N-X	ES3050TI-2W-X	ES3050TI-5W-X
	PAL 9Hz	ES3050TI-2N-X1	ES3050TI-5N-X1	ES3050TI-2W-X1	ES3050TI-5W-X1

*Pedestal mount models include Esprit EPP pedestal adapter.
**Wall mount models include Esprit EWM wall mount.

Note: Pelco thermal imaging products are subject to U.S. government export control regulations. For information, please visit www.pelco.com and www.bis.doc.gov.

RELATED PRODUCTS

IPS-RDPE-2	Remote data port. 24 VAC, wall/pole mount video/data breakout box. Allows ground-level control/progamming when used with the IPS-RMK. (No code upload.)
IPS-RMK	Remote monitor kit. Includes TFT-LCD monitor, PDA handheld, cables, and carrying case. Allows viewing of camera video, local PTZ control, and system setup.
TXB Series	Translator boards for AD Manchester, Hernis, Bosch (Philips, Burle), NTCIP, Sensormatic, and Vicon protocols.

RECOMMENDED MOUNTS

Esprit Series	Includes mounts for wall, pedestal, corner, parapet, and pole applications.
PM2000/PM2010	Pedestal mount with cable feedthrough. For use with Esprit systems with pedestal adapter plate.

RECOMMENDED POWER SUPPLIES

MCS Series	Multiple 24 VAC camera power supply, indoor
WCS Series	Single/multiple 24 VAC camera power supply, outdoor

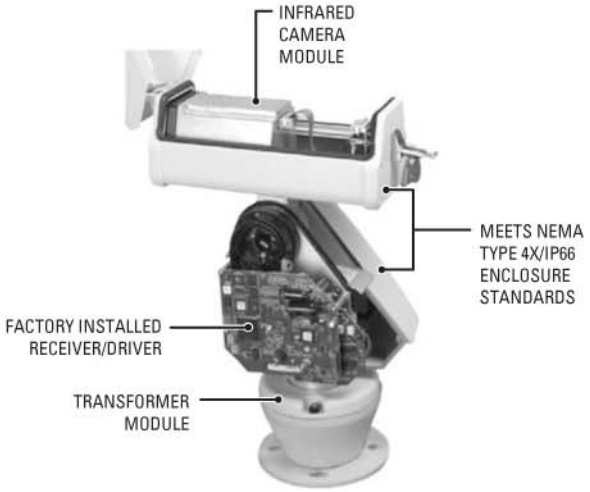

Serinfo
servicios informáticos

Francesc Macià, 21
43881 CUNIT (Tarragona)
Tel.: 977 676 101
Fax.: 977 676 117
serinfo@serinfocunit.com
www.serinfocunit.com

Pelco, the Pelco logo, Coaxitron, and Esprit are registered trademarks of Pelco.
Specifications subject to change without notice.
©Copyright 2007, Pelco. All rights reserved.